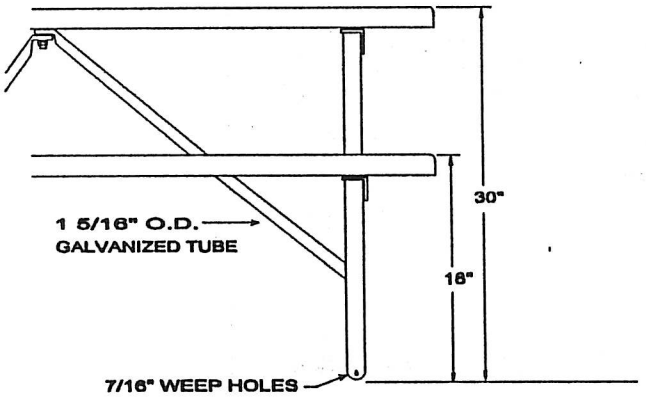

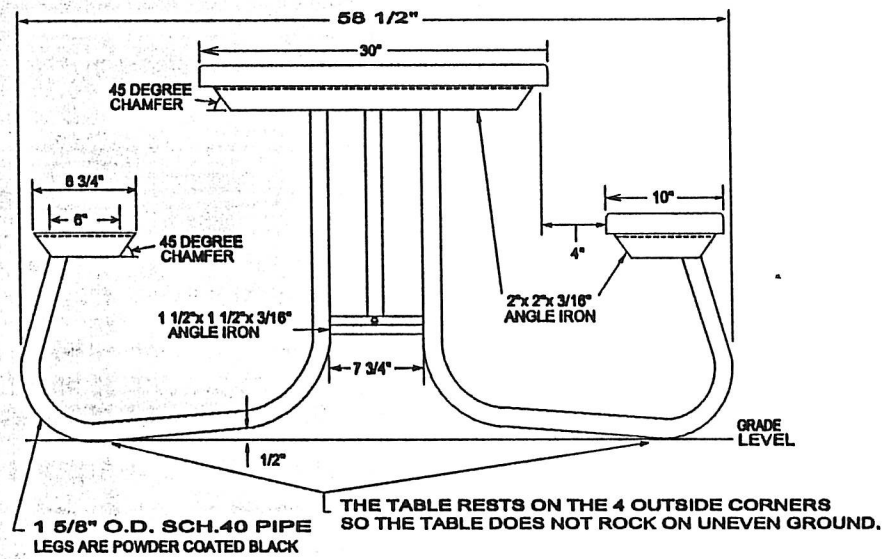

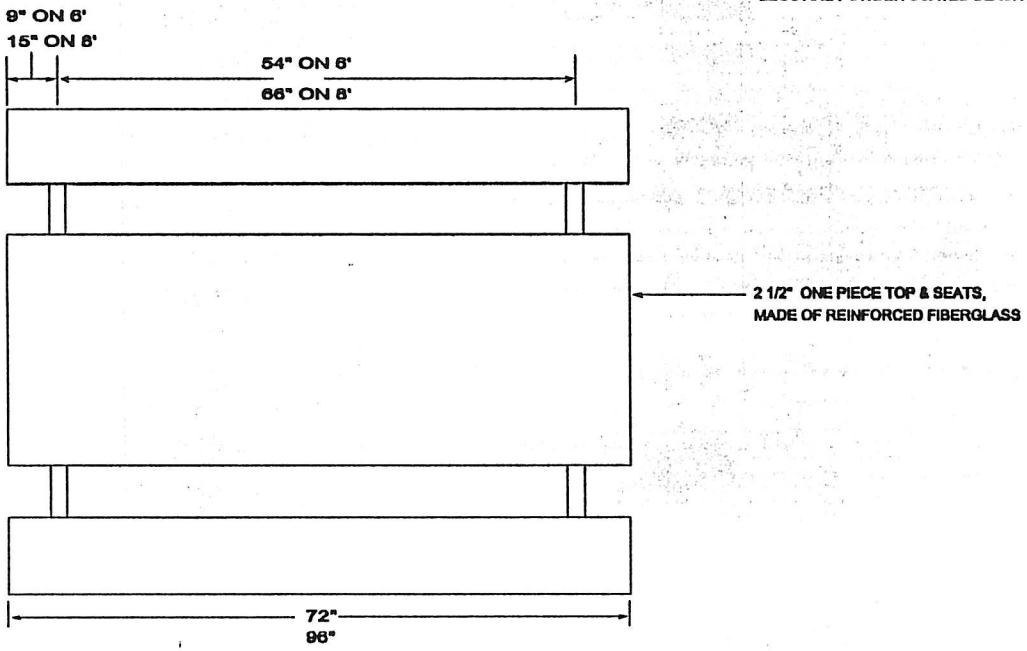

KAY PARK

MODEL 6/8CJCF			WT. 6' - 207 lbs. 8' - 245 lbs.
DRAWN BY LCB	DATE 8/25/92	SCALE NONE	

FILE No. 68CJCF