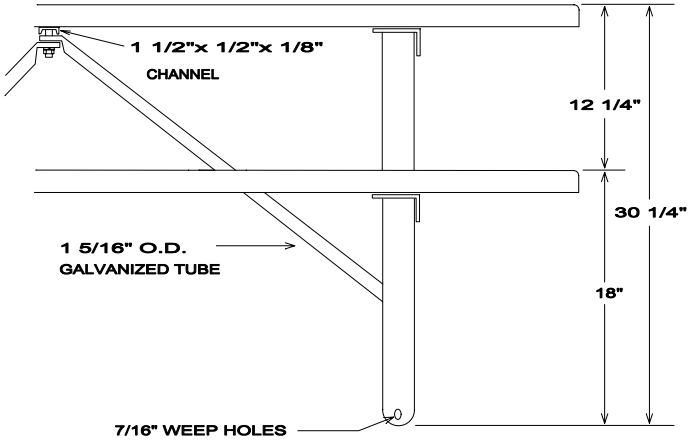

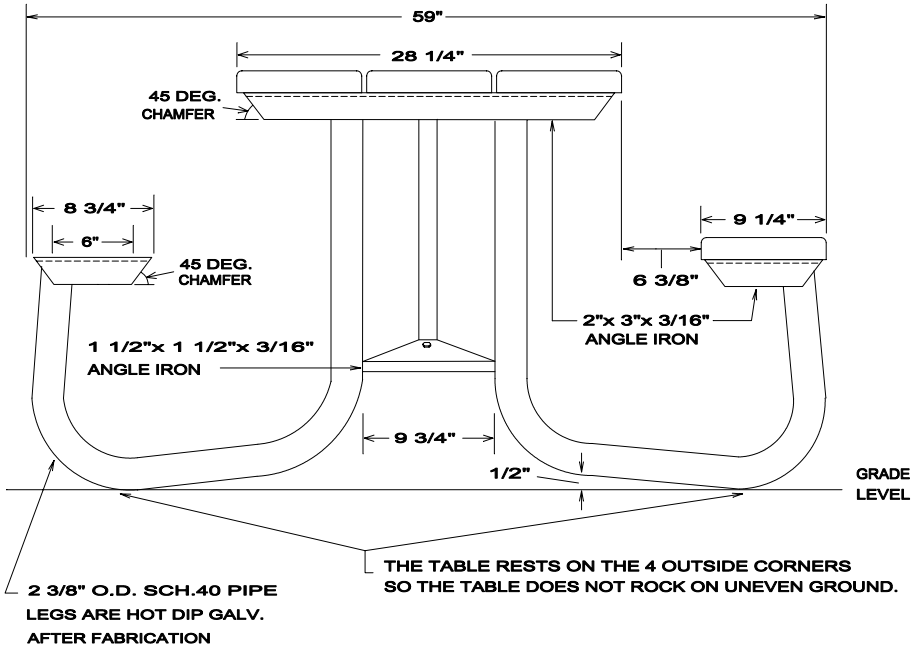

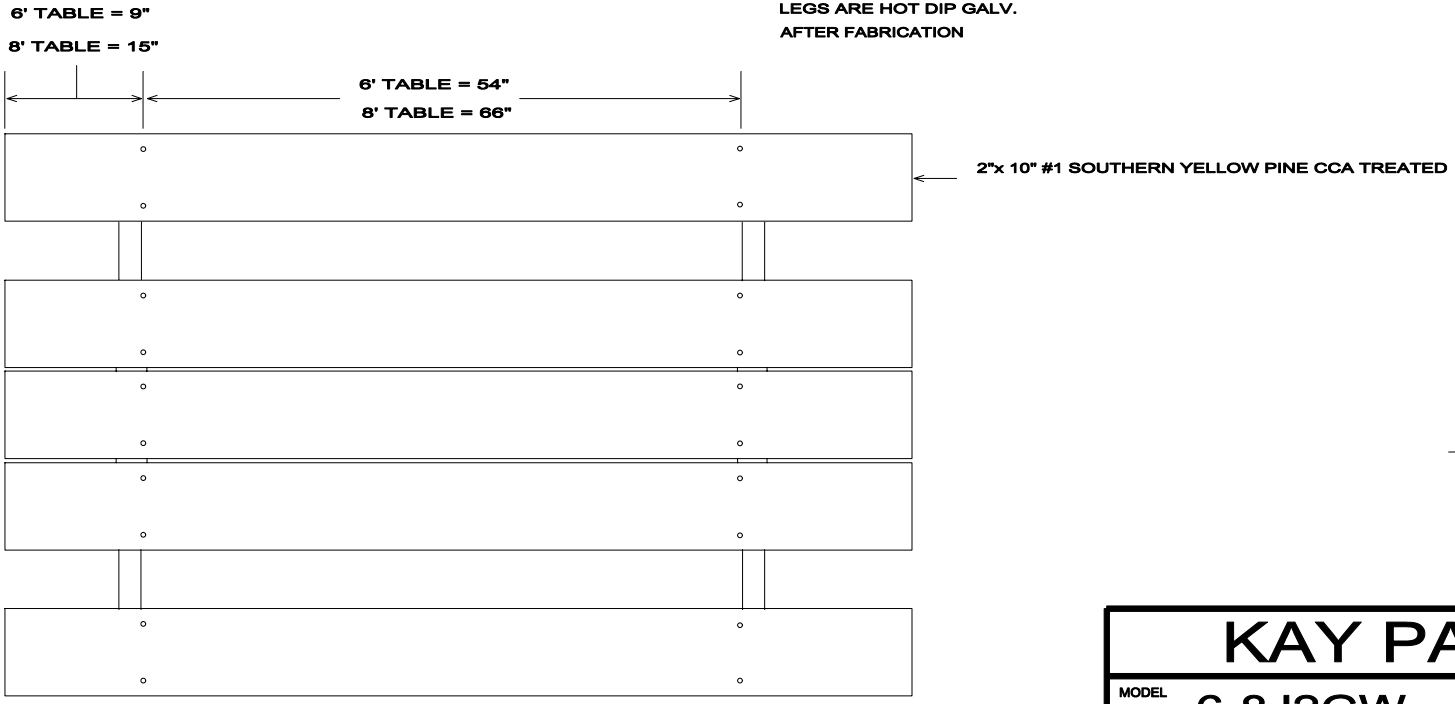

MODEL	WEIGHT
6J2GW	208
8J2GW	263

KAY PARK

MODEL 6-8J2GW			WT. SEE CHART
DRAWN BY LCB	DATE 8/26/92		SCALE NONE

FILE No. 68J2GW